# Quantum algorithms for linear algebra.

Anupam Prakash,
Center for Quantum Technologies and
Nanyang Technological University, Singapore.

September 22, 2015

# Overview


1. Introduction
2. The augmented $QRAM$
3. Quantum Singular Value Estimation
4. Applications, Questions

# Introduction

- Quantum algorithms for linear algebra: Linear systems [HHL09], preprints on quantum machine learning [LMR13...].

# Introduction

- Quantum algorithms for linear algebra: Linear systems [HHL09], preprints on quantum machine learning [LMR13...].
- Assumptions about data like sparsity or bounded $\ell_\infty$ norm.

# Introduction

- Quantum algorithms for linear algebra: Linear systems [HHL09], preprints on quantum machine learning [LMR13...].
- Assumptions about data like sparsity or bounded $\ell_\infty$ norm.
- Polynomial dependence on dimension of data for the general case.

# Introduction

- Quantum algorithms for linear algebra: Linear systems [HHL09], preprints on quantum machine learning [LMR13...].
- Assumptions about data like sparsity or bounded $\ell_\infty$ norm.
- Polynomial dependence on dimension of data for the general case.
- Quantum algorithms that work for all data with poly-logarithmic dependence on dimension.

# Introduction

- Quantum algorithms for linear algebra: Linear systems [HHL09], preprints on quantum machine learning [LMR13...].
- Assumptions about data like sparsity or bounded $\ell_\infty$ norm.
- Polynomial dependence on dimension of data for the general case.
- Quantum algorithms that work for all data with poly-logarithmic dependence on dimension.
- What linear algebra problems can we can solve with such guarantees?

# Introduction

- How to design a quantum algorithm for linear algebra/machine learning?

# Introduction

- How to design a quantum algorithm for linear algebra/machine learning?
- The encode-process-extract framework.

# Introduction

- How to design a quantum algorithm for linear algebra/machine learning?
- The encode-process-extract framework.
- Encoding vectors and matrices into quantum states: the augmented $QRAM$.

# Introduction

- How to design a quantum algorithm for linear algebra/machine learning?
- The encode-process-extract framework.
- Encoding vectors and matrices into quantum states: the augmented $QRAM$.
- Processing: Coherent operations on quantum encodings, quantum singular value estimation.

# Introduction

- How to design a quantum algorithm for linear algebra/machine learning?
- The encode-process-extract framework.
- Encoding vectors and matrices into quantum states: the augmented $QRAM$.
- Processing: Coherent operations on quantum encodings, quantum singular value estimation.
- Extraction: Sampling quantum state to obtain classically 'useful' information, low rank approximation [P14] and recommender systems [KP15].

# Quantum memory models

- $O(\sqrt{n})$ speedup for quantum search assumes that the data is stored in $QRAM$,

$$\sum_{i\in[n]} \phi_i \left|i\right\rangle \xrightarrow{QRAM} \sum_{i\in[n]} \phi_i \left|i\right\rangle \left|x_i\right\rangle \tag{1}$$

# Quantum memory models

- $O(\sqrt{n})$ speedup for quantum search assumes that the data is stored in $QRAM$,

$$\sum_{i\in[n]} \phi_i \left|i\right\rangle \xrightarrow{QRAM} \sum_{i\in[n]} \phi_i \left|i\right\rangle \left|x_i\right\rangle \tag{1}$$

- Storage time is discounted, pre-processing can be done at time of storage.

# Quantum memory models

- $O(\sqrt{n})$ speedup for quantum search assumes that the data is stored in $QRAM$,

$$\sum_{i\in[n]} \phi_i \left|i\right\rangle \xrightarrow{QRAM} \sum_{i\in[n]} \phi_i \left|i\right\rangle \left|x_i\right\rangle \tag{1}$$

- Storage time is discounted, pre-processing can be done at time of storage.
- $O(nnz(x))$ overhead for pre-processing vectors is reasonable, all entries of vector must be read.

# Quantum memory models

- $O(\sqrt{n})$ speedup for quantum search assumes that the data is stored in $QRAM$,

$$\sum_{i\in[n]} \phi_i \left|i\right\rangle \xrightarrow{QRAM} \sum_{i\in[n]} \phi_i \left|i\right\rangle \left|x_i\right\rangle \tag{1}$$

- Storage time is discounted, pre-processing can be done at time of storage.
- $O(nnz(x))$ overhead for pre-processing vectors is reasonable, all entries of vector must be read.
- Quantum big data model: Massive dataset stored in quantum memory, storage time discounted, find quantum speedups for linear algebra and machine learning tasks.

# Encoding, augmented $QRAM$

# Encoding, augmented $QRAM$

- **Definition**

  Vector state: Given $x \in \mathbb{R}^n$ the vector state $|x\rangle$ is defined as $\frac{1}{|x|}\sum_{i\in[n]} x_i |i\rangle$.

# Encoding, augmented $QRAM$

- **Definition**

  Vector state: Given $x \in \mathbb{R}^n$ the vector state $|x\rangle$ is defined as $\frac{1}{|x|}\sum_{i\in[n]} x_i |i\rangle$.

  - Vector state preparation using $QRAM$ requires time $\widetilde{O}(\sqrt{n})$ in the worst case by the search lower bounds.

# Encoding, augmented $QRAM$

- **Definition**

  Vector state: Given $x \in \mathbb{R}^n$ the vector state $|x\rangle$ is defined as $\frac{1}{|x|}\sum_{i\in[n]} x_i |i\rangle$.

  - Vector state preparation using $QRAM$ requires time $\widetilde{O}(\sqrt{n})$ in the worst case by the search lower bounds.
  - But we can pre-process, change memory organization and add classical data structures once we have a $QRAM$.

# Encoding, augmented $QRAM$

- **Definition**

  Vector state: Given $x \in \mathbb{R}^n$ the vector state $|x\rangle$ is defined as $\frac{1}{|x|}\sum_{i\in[n]} x_i\,|i\rangle$.

  - Vector state preparation using $QRAM$ requires time $\widetilde{O}(\sqrt{n})$ in the worst case by the search lower bounds.
  - But we can pre-process, change memory organization and add classical data structures once we have a $QRAM$.

# Encoding, augmented $QRAM$

- **Definition**

  Vector state: Given $x \in \mathbb{R}^n$ the vector state $|x\rangle$ is defined as $\frac{1}{|x|}\sum_{i\in[n]} x_i\,|i\rangle$.

  - Vector state preparation using $QRAM$ requires time $\widetilde{O}(\sqrt{n})$ in the worst case by the search lower bounds.
  - But we can pre-process, change memory organization and add classical data structures once we have a $QRAM$.

- **Theorem**

  *Vector state $|x\rangle$ can be prepared in time $O(polylog(n))$ if $x \in \mathbb{R}^n$ is stored in the augmented $QRAM$.*

# Augmented $QRAM$

- A high level view of the augmented $QRAM$.

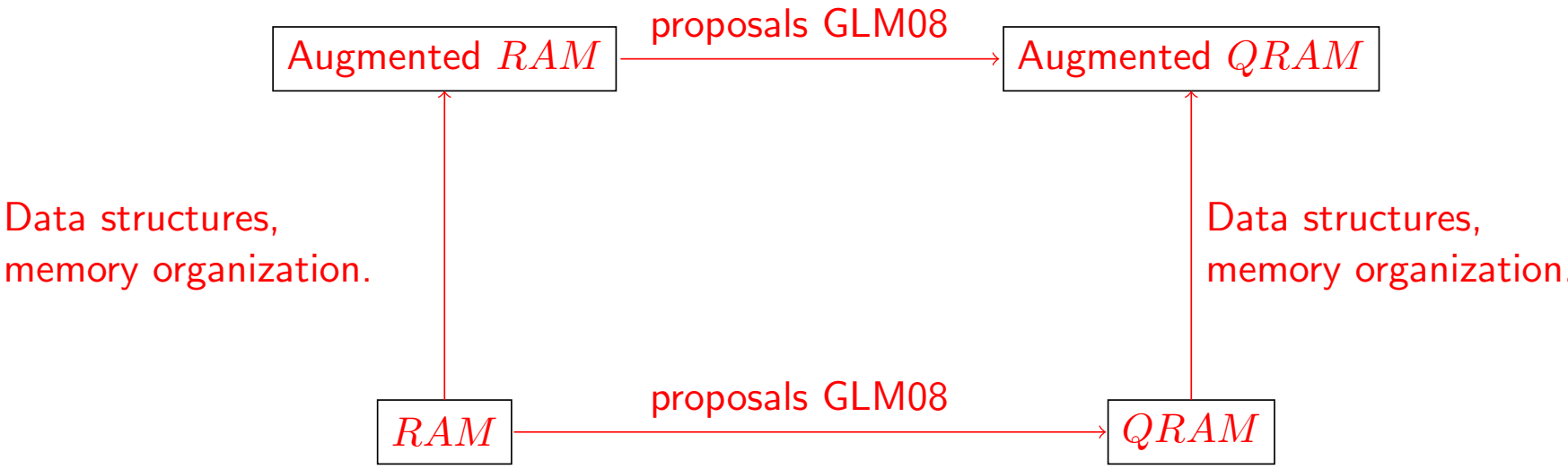

# Augmented $QRAM$

- A high level view of the augmented $QRAM$.

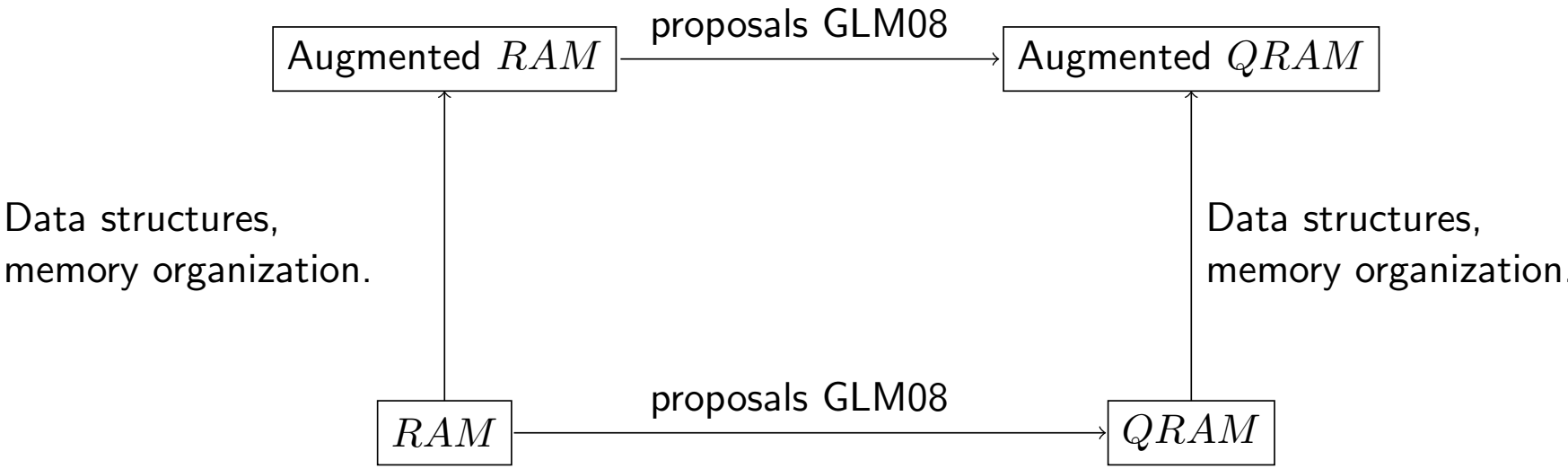


- The bottleneck is the realization of the $QRAM$, augmentations are classical and can be implemented.

# Quantum singular value estimation

- Obtain generic linear algebra algorithm with running time poly-logarithmic in matrix dimensions using augmented $QRAM$.

# Quantum singular value estimation

- Obtain generic linear algebra algorithm with running time poly-logarithmic in matrix dimensions using augmented $QRAM$.
- Let $M \in \mathbb{R}^{m \times n}$ have singular value decomposition $M = \sum_i \sigma_i u_i v_i^t$.

# Quantum singular value estimation

- Obtain generic linear algebra algorithm with running time poly-logarithmic in matrix dimensions using augmented $QRAM$.
- Let $M \in \mathbb{R}^{m \times n}$ have singular value decomposition $M = \sum_i \sigma_i u_i v_i^t$.
- Given a superposition over the singular vectors $\sum_i \alpha_i |v_i\rangle$ (respectively $|u_i\rangle$) we want to obtain $\sum_i \alpha_i |v_i\rangle |\overline{\sigma_i}\rangle$ where $\overline{\sigma_i} \in \sigma_i \pm \epsilon \|M\|_F$ for all $i$.

# Quantum singular value estimation

- Obtain generic linear algebra algorithm with running time poly-logarithmic in matrix dimensions using augmented $QRAM$.
- Let $M \in \mathbb{R}^{m \times n}$ have singular value decomposition $M = \sum_i \sigma_i u_i v_i^t$.
- Given a superposition over the singular vectors $\sum_i \alpha_i |v_i\rangle$ (respectively $|u_i\rangle$) we want to obtain $\sum_i \alpha_i |v_i\rangle |\overline{\sigma_i}\rangle$ where $\overline{\sigma_i} \in \sigma_i \pm \epsilon \|M\|_F$ for all $i$.

# Quantum singular value estimation

- Obtain generic linear algebra algorithm with running time poly-logarithmic in matrix dimensions using augmented $QRAM$.
- Let $M \in \mathbb{R}^{m \times n}$ have singular value decomposition $M = \sum_i \sigma_i u_i v_i^t$.
- Given a superposition over the singular vectors $\sum_i \alpha_i |v_i\rangle$ (respectively $|u_i\rangle$) we want to obtain $\sum_i \alpha_i |v_i\rangle |\overline{\sigma_i}\rangle$ where $\overline{\sigma_i} \in \sigma_i \pm \epsilon \|M\|_F$ for all $i$.

- **Theorem**

  *If $M \in \mathbb{R}^{m \times n}$ stored in the augmented $QRAM$, there is an algorithm with running time $O(polylog(mn)/\epsilon)$ that performs quantum singular value estimation with probability at least $1 - 1/poly(n)$.*

# Quantum singular value estimation

- The self analysis approach from $LMR13$ requires time $\widetilde{O}(1/\epsilon^3)$, analysis of coherence is required [P14].

# Quantum singular value estimation

- The self analysis approach from $LMR13$ requires time $\widetilde{O}(1/\epsilon^3)$, analysis of coherence is required [P14].
- Reduce singular value estimation to estimating the principal angles between subspaces associated with $M$. [Jordan's lemma]

# Quantum singular value estimation

- The self analysis approach from $LMR13$ requires time $\widetilde{O}(1/\epsilon^3)$, analysis of coherence is required [P14].
- Reduce singular value estimation to estimating the principal angles between subspaces associated with $M$. [Jordan's lemma]
- Implement reflection in the subspaces as unitary operators using augmented $QRAM$.

# Quantum singular value estimation

- The self analysis approach from $LMR13$ requires time $\widetilde{O}(1/\epsilon^3)$, analysis of coherence is required [P14].
- Reduce singular value estimation to estimating the principal angles between subspaces associated with $M$. [Jordan's lemma]
- Implement reflection in the subspaces as unitary operators using augmented $QRAM$.
- Apply phase estimation to the product of the reflection operators to estimate the angles and thus the singular values.

# Quantum singular value estimation

- The self analysis approach from $LMR13$ requires time $\widetilde{O}(1/\epsilon^3)$, analysis of coherence is required [P14].
- Reduce singular value estimation to estimating the principal angles between subspaces associated with $M$. [Jordan's lemma]
- Implement reflection in the subspaces as unitary operators using augmented $QRAM$.
- Apply phase estimation to the product of the reflection operators to estimate the angles and thus the singular values.
- Applications: quantum projections/linear systems and low rank approximation by column selection/ recommender systems.

# Overview

- Vector state preparation.

# Overview

- Vector state preparation.
- Augmented $QRAM$.

# Overview

- Vector state preparation.
- Augmented $QRAM$.
- Quantum singular value estimation.

# Overview

- Vector state preparation.
- Augmented $QRAM$.
- Quantum singular value estimation.
- Applications and open questions.

# Vector states using $QRAM$

- There is a unitary $U|0\rangle = |\phi\rangle$ where,

$$|\phi\rangle = \frac{1}{\sqrt{n}} \sum_{i \in [n]} |i\rangle \left( \frac{x_i}{|x|_\infty} |0\rangle + \beta_i |1\rangle \right) \tag{2}$$

# Vector states using $QRAM$

- There is a unitary $U|0\rangle = |\phi\rangle$ where,

$$|\phi\rangle = \frac{1}{\sqrt{n}} \sum_{i \in [n]} |i\rangle \left( \frac{x_i}{|x|_\infty} |0\rangle + \beta_i |1\rangle \right) \tag{2}$$

- $QRAM$ query, conditional rotation, post select on $|0\rangle$, erase query register. Success probability $\frac{1}{n|x|_\infty^2}$.

# Vector states using $QRAM$

- There is a unitary $U|0\rangle = |\phi\rangle$ where,

$$|\phi\rangle = \frac{1}{\sqrt{n}} \sum_{i \in [n]} |i\rangle \left( \frac{x_i}{|x|_\infty} |0\rangle + \beta_i |1\rangle \right) \tag{2}$$

- $QRAM$ query, conditional rotation, post select on $|0\rangle$, erase query register. Success probability $\frac{1}{n|x|_\infty^2}$.
- $|\phi\rangle = \sin(\theta)|x,0\rangle + \cos(\theta)|x',1\rangle$, reflection in $S_\phi = US_0U^{-1}$ and reflection in $|x,0\rangle$ is phase flip if ancilla is $|1\rangle$.

# Vector states using $QRAM$

- There is a unitary $U|0\rangle = |\phi\rangle$ where,

$$|\phi\rangle = \frac{1}{\sqrt{n}} \sum_{i \in [n]} |i\rangle \left( \frac{x_i}{|x|_\infty} |0\rangle + \beta_i |1\rangle \right) \tag{2}$$

- $QRAM$ query, conditional rotation, post select on $|0\rangle$, erase query register. Success probability $\frac{1}{n|x|_\infty^2}$.
- $|\phi\rangle = \sin(\theta)|x,0\rangle + \cos(\theta)|x',1\rangle$, reflection in $S_\phi = US_0U^{-1}$ and reflection in $|x,0\rangle$ is phase flip if ancilla is $|1\rangle$.
- The product of reflections $-S_\phi S_x$ is rotation by $2\theta$, after $k$ iterations:

$$(-S_\phi S_x)^k |\phi\rangle = \sin((2k+1)\theta)|x,0\rangle + \cos((2k+1)\theta)|x^\perp,1\rangle \tag{3}$$

# Amplitude amplification

- As $\theta \geq \sin(\theta) = \frac{1}{\sqrt{n}|x|_\infty}$, for $k = O(\sqrt{n}|x|_\infty)$ the success probability is a constant.

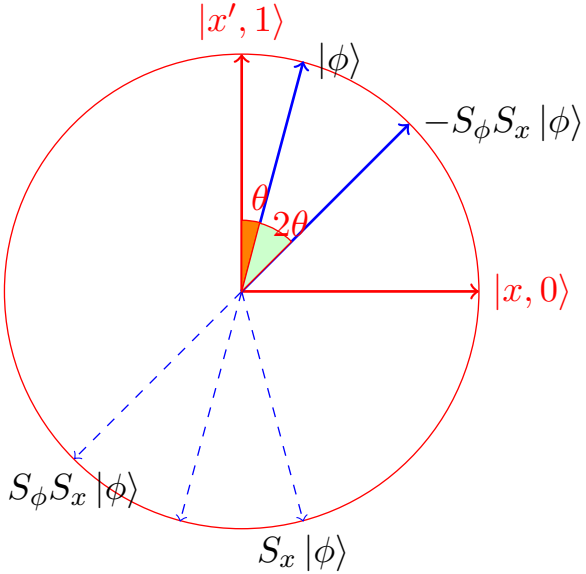

# Amplitude amplification

- As $\theta \geq \sin(\theta) = \frac{1}{\sqrt{n}|x|_\infty}$, for $k = O(\sqrt{n}|x|_\infty)$ the success probability is a constant.

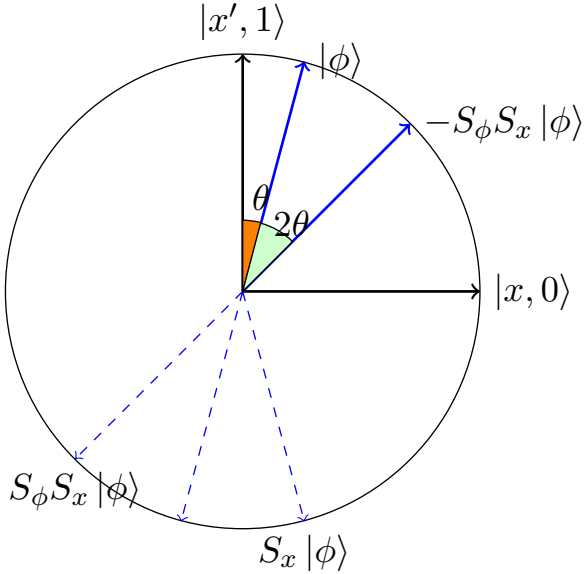


- Amplitude amplification can be made exact if the success probability is known.

# Coherent exact amplitude amplification

- There is a unitary operator $U$ such that $U\left|i, 0^{\lceil \log n \rceil + 1}\right\rangle = \left|\phi_i\right\rangle = \sin(\theta_i)\left|i, x_i, 0\right\rangle + \cos(\theta_i)\left|i, x_i', 1\right\rangle$.

# Coherent exact amplitude amplification

- There is a unitary operator $U$ such that $U\left|i, 0^{\lceil \log n \rceil + 1}\right\rangle = \left|\phi_i\right\rangle = \sin(\theta_i)\left|i, x_i, 0\right\rangle + \cos(\theta_i)\left|i, x_i', 1\right\rangle$.
- $x_i \in \mathbb{R}^n$ and $\sin(\theta_i)$ are stored in $QRAM$.

# Coherent exact amplitude amplification

- There is a unitary operator $U$ such that $U\left|i, 0^{\lceil \log n \rceil + 1}\right\rangle = \left|\phi_i\right\rangle = \sin(\theta_i)\left|i, x_i, 0\right\rangle + \cos(\theta_i)\left|i, x_i', 1\right\rangle$.
- $x_i \in \mathbb{R}^n$ and $\sin(\theta_i)$ are stored in $QRAM$.
- Then $\sum_i \alpha_i \left|i, 0^l\right\rangle \to \sum_i \alpha_i \left|i, x_i\right\rangle$ requires time $\widetilde{O}(\frac{T(U)}{\min_i \sin(\theta_i)})$.

# Coherent exact amplitude amplification

- There is a unitary operator $U$ such that $U\left|i, 0^{\lceil \log n \rceil + 1}\right\rangle = \left|\phi_i\right\rangle = \sin(\theta_i)\left|i, x_i, 0\right\rangle + \cos(\theta_i)\left|i, x_i', 1\right\rangle$.
- $x_i \in \mathbb{R}^n$ and $\sin(\theta_i)$ are stored in $QRAM$.
- Then $\sum_i \alpha_i \left|i, 0^l\right\rangle \to \sum_i \alpha_i \left|i, x_i\right\rangle$ requires time $\widetilde{O}(\frac{T(U)}{\min_i \sin(\theta_i)})$.
- Proof: Let $t_i$ be the exact number of rotations required, $\frac{\pi/2}{\overline{\theta_i}} = 2t_i + 1$ choosing the largest $\overline{\theta_i} \leq \theta_i$.
  Compute $\sum_i \alpha_i \left|i, 0^l, t_i\right\rangle$.

# Coherent exact amplitude amplification

- There is a unitary operator $U$ such that $U\left|i, 0^{\lceil \log n \rceil + 1}\right\rangle = \left|\phi_i\right\rangle = \sin(\theta_i)\left|i, x_i, 0\right\rangle + \cos(\theta_i)\left|i, x_i', 1\right\rangle$.
- $x_i \in \mathbb{R}^n$ and $\sin(\theta_i)$ are stored in $QRAM$.
- Then $\sum_i \alpha_i \left|i, 0^l\right\rangle \to \sum_i \alpha_i \left|i, x_i\right\rangle$ requires time $\widetilde{O}(\frac{T(U)}{\min_i \sin(\theta_i)})$.
- Proof: Let $t_i$ be the exact number of rotations required, $\frac{\pi/2}{\overline{\theta_i}} = 2t_i + 1$ choosing the largest $\overline{\theta_i} \leq \theta_i$.
  Compute $\sum_i \alpha_i \left|i, 0^l, t_i\right\rangle$.
- Apply unitary $R(-S_\phi S_x)$ where $R\left|0\right\rangle = -\left|0\right\rangle, R\left|t\right\rangle = \left|t-1\right\rangle$ if $t > 1$ and reflections $S_\phi$ and $S_x$ are conditioned on auxiliary register being non zero.

# Quantum key value map

- A quantum key value map with $(K_i, V_i) \in \mathbb{N}$ for $i \in [m]$ implements the following transformation in time $\widetilde{O}(1)$,

$$\sum_{i \in [m]} \alpha_i \left| K_i \right\rangle \leftrightarrow \sum_{i \in [n]} \alpha_i \left| V_i \right\rangle \tag{4}$$

# Quantum key value map

- A quantum key value map with $(K_i, V_i) \in \mathbb{N}$ for $i \in [m]$ implements the following transformation in time $\widetilde{O}(1)$,

$$\sum_{i\in[m]} \alpha_i |K_i\rangle \leftrightarrow \sum_{i\in[n]} \alpha_i |V_i\rangle \tag{4}$$

- Store $K_i$ at address $f(V_i)$, $V_i$ at address $f(K_i)$,

$$\begin{aligned}\sum_{i\in[n]} \alpha_i |K_i\rangle &\xrightarrow{f(K),QRAM} \sum_{i\in[n]} \alpha_i |K_i, f(K_i), V_i\rangle \\ &\xrightarrow{f(K),f(V)} \sum_{i\in[n]} \alpha_i |K_i, f(V_i), V_i\rangle \\ &\xrightarrow{QRAM,f(V)} \sum_{i\in[n]} \alpha_i |f(V_i), V_i\rangle \end{aligned} \tag{5}$$

# Quantum key value map

- A quantum key value map with $(K_i, V_i) \in \mathbb{N}$ for $i \in [m]$ implements the following transformation in time $\widetilde{O}(1)$,

$$\sum_{i\in[m]} \alpha_i |K_i\rangle \leftrightarrow \sum_{i\in[n]} \alpha_i |V_i\rangle \tag{4}$$

- Store $K_i$ at address $f(V_i)$, $V_i$ at address $f(K_i)$,

$$\begin{aligned}\sum_{i\in[n]} \alpha_i |K_i\rangle &\xrightarrow{f(K),QRAM} \sum_{i\in[n]} \alpha_i |K_i, f(K_i), V_i\rangle \\ &\xrightarrow{f(K),f(V)} \sum_{i\in[n]} \alpha_i |K_i, f(V_i), V_i\rangle \\ &\xrightarrow{QRAM,f(V)} \sum_{i\in[n]} \alpha_i |f(V_i), V_i\rangle \end{aligned} \tag{5}$$

- Collisions can be handled.

# Sparse vector state preparation

- Set up a key value map $X_0 + i \leftrightarrow t_i$ between memory addresses and indices of $v$.

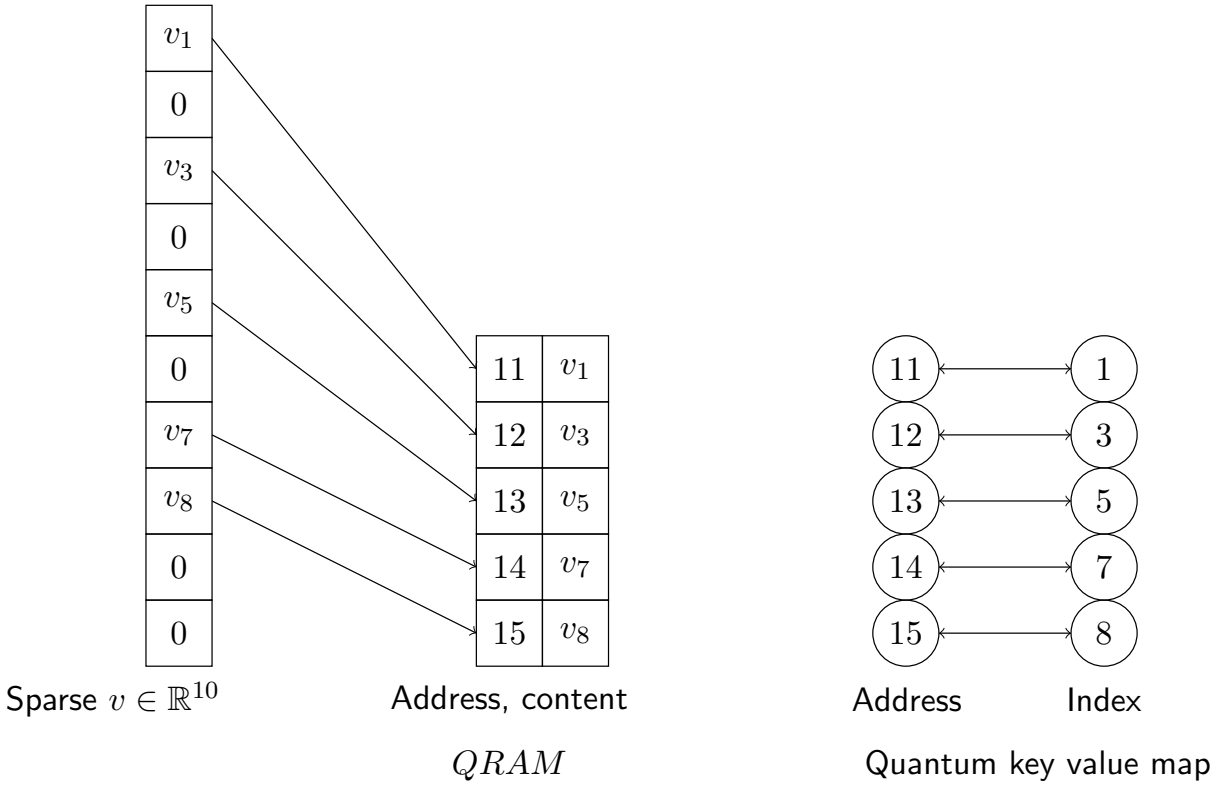


- Can prepare $|v\rangle$ in time $\widetilde{O}(\sqrt{nnz(v)})$.
- $\frac{1}{\sqrt{k}} \sum_{i \in [k]} |i\rangle \xrightarrow{AA} \frac{1}{\sqrt{k}} \sum_{i \in [k]} v_{t_i} |i + X_0\rangle \to \frac{1}{\sqrt{k}} \sum_{i \in [k]} v_{t_i} |t_i\rangle$.

# Augmented $QRAM$ components

- Vector state preparation time is $\widetilde{O}(\sqrt{n}|v|_\infty)$, this is constant if entries of $v$ lie in $[1/\sqrt{n}, 2/\sqrt{n}]$.

# Augmented $QRAM$ components

- Vector state preparation time is $\widetilde{O}(\sqrt{n}|v|_\infty)$, this is constant if entries of $v$ lie in $[1/\sqrt{n}, 2/\sqrt{n}]$.
- Augmented $QRAM$ is therefore organized into bins:

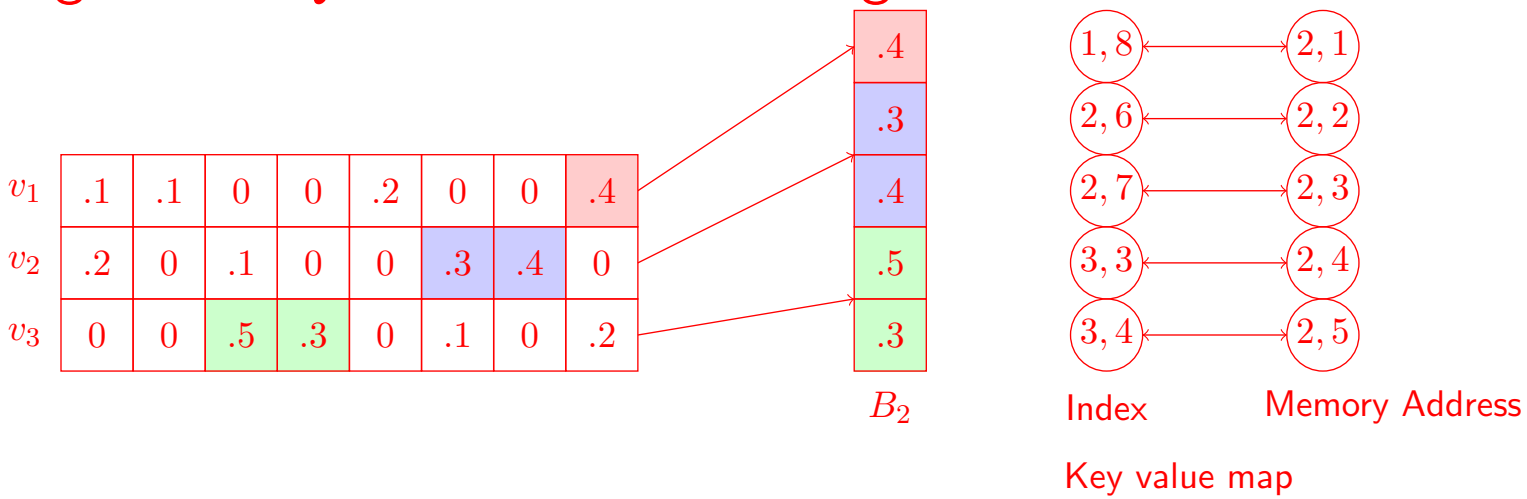

# Augmented $QRAM$ components

- Vector state preparation time is $\widetilde{O}(\sqrt{n}|v|_\infty)$, this is constant if entries of $v$ lie in $[1/\sqrt{n}, 2/\sqrt{n}]$.
- Augmented $QRAM$ is therefore organized into bins:

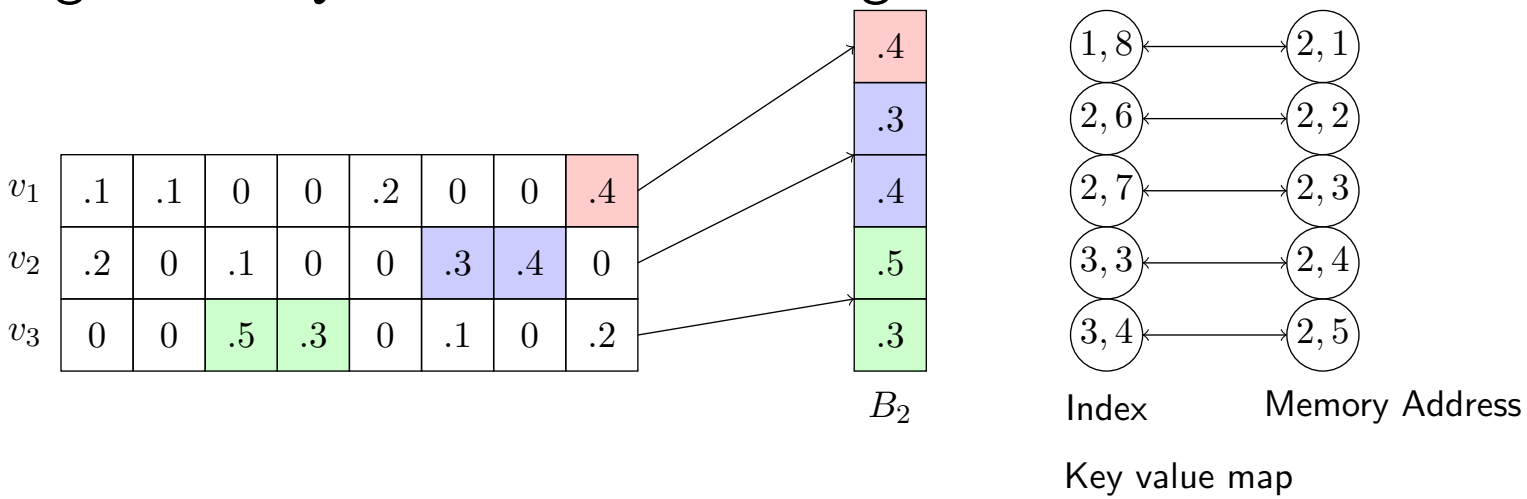


- In addition, we maintain counts and offsets as metadata in quantum memory.

# Augmented $QRAM$ architecture

- Augmented $QRAM$ architecture:

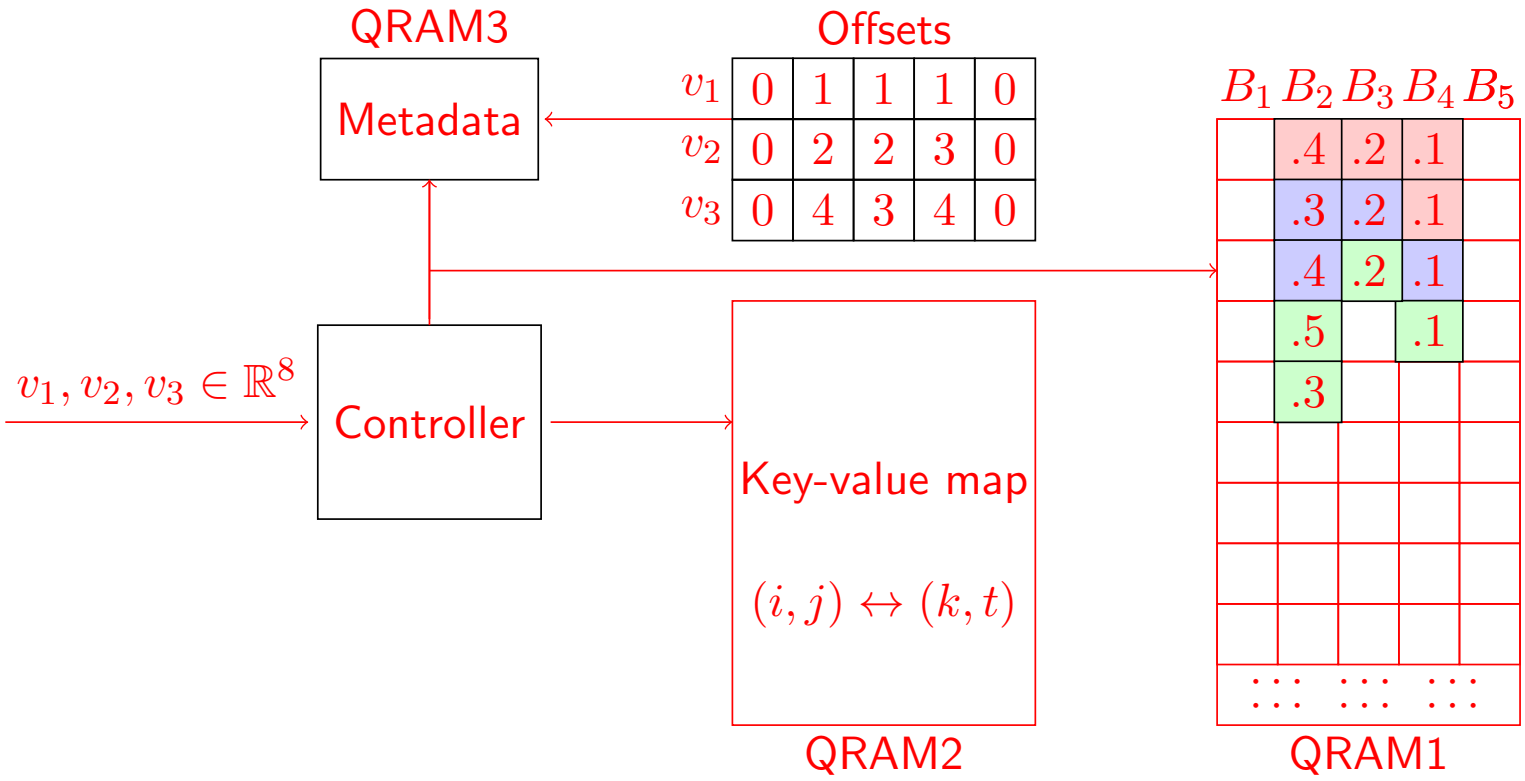

# Augmented $QRAM$ architecture

- Augmented $QRAM$ architecture:

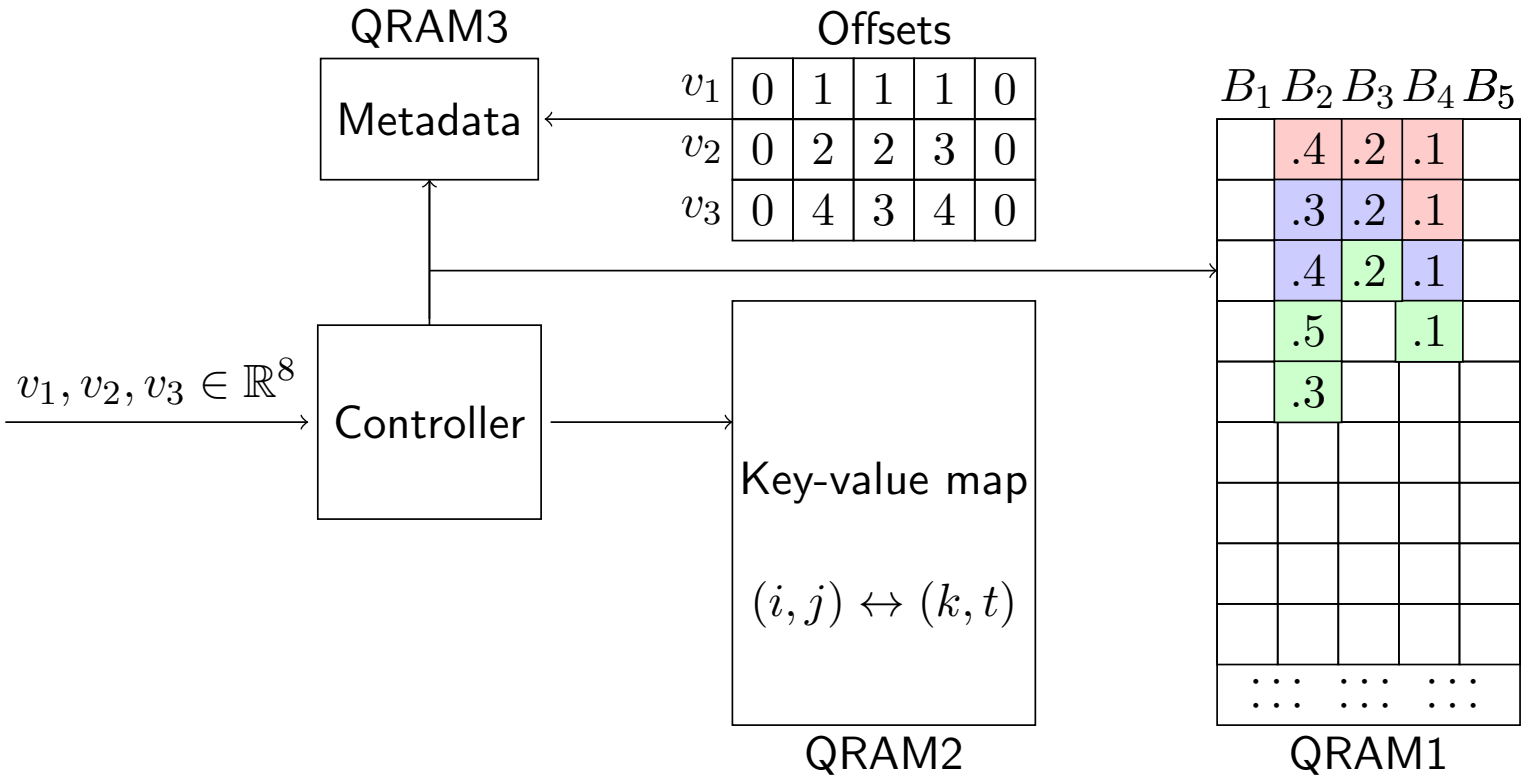


- Pre-processing can be done as the controller streams over the vector entries.

# State preparation with augmented $QRAM$

- We describe $|i, 0\rangle \rightarrow |i, x\rangle$, for query in superposition use coherent exact amplitude estimation.

# State preparation with augmented $QRAM$

- We describe $|i, 0\rangle \rightarrow |i, x\rangle$, for query in superposition use coherent exact amplitude estimation.
- The metadata: Counts $c_{ik}$ and offsets $o_{ik}$ for the elements of $x$ in bin $B_k$.

# State preparation with augmented $QRAM$

- We describe $|i, 0\rangle \rightarrow |i, x\rangle$, for query in superposition use coherent exact amplitude estimation.
- The metadata: Counts $c_{ik}$ and offsets $o_{ik}$ for the elements of $x$ in bin $B_k$.
- Let $l(k) = 2^{\lceil \log(c(k)) \rceil}$, smallest power of $2$ more than $c_k$.

# State preparation with augmented $QRAM$

- We describe $|i,0\rangle \to |i,x\rangle$, for query in superposition use coherent exact amplitude estimation.
- The metadata: Counts $c_{ik}$ and offsets $o_{ik}$ for the elements of $x$ in bin $B_k$.
- Let $l(k) = 2^{\lceil \log(c(k)) \rceil}$, smallest power of 2 more than $c_k$.
- Prepare state $\frac{1}{\sqrt{n}} \sum |k, t + o_{ik}\rangle$ as follows,

$$|i\rangle \frac{1}{\sqrt{\sum_{k\in[b]} l(k)}} \sum_{k\in[b]} \sqrt{l(k)}\, |k, 0^{\lceil \log N \rceil}\rangle$$

$$\frac{1}{\sqrt{\sum_{k\in[b]} l(k)}} |i\rangle \sum_{k\in[b]} \left( \sum_{t\in[c(k)]} |k,t,0\rangle + \sum_{c(k)<t\leq l(k)} |k,t,1\rangle \right) \quad (6)$$

# State preparation with augmented $QRAM$

- Add ancilla and apply conditional rotation,

$$\frac{1}{\sqrt{n}} \sum |k, t + o_{ik}\rangle \left( \frac{x_j}{2^{-k}} |0\rangle + \beta |1\rangle \right) \tag{7}$$

# State preparation with augmented $QRAM$

- Add ancilla and apply conditional rotation,

$$\frac{1}{\sqrt{n}} \sum |k, t + o_{ik}\rangle \left( \frac{x_j}{2^{-k}} |0\rangle + \beta |1\rangle \right) \tag{7}$$

- $x_j \in [2^{-k-1}, 2^{-k}]$, success probability is at least $1/4$.

# State preparation with augmented $QRAM$

- Add ancilla and apply conditional rotation,

$$\frac{1}{\sqrt{n}} \sum |k, t + o_{ik}\rangle \left( \frac{x_j}{2^{-k}} |0\rangle + \beta |1\rangle \right) \tag{7}$$

- $x_j \in [2^{-k-1}, 2^{-k}]$, success probability is at least $1/4$.
- Exact amplitude amplification to get $\frac{1}{\sqrt{n}} \sum x_j |i, k, t + o_{ik}\rangle$.

# State preparation with augmented $QRAM$

- Add ancilla and apply conditional rotation,

$$\frac{1}{\sqrt{n}} \sum |k, t + o_{ik}\rangle \left( \frac{x_j}{2^{-k}} |0\rangle + \beta |1\rangle \right) \tag{7}$$

- $x_j \in [2^{-k-1}, 2^{-k}]$, success probability is at least $1/4$.
- Exact amplitude amplification to get $\frac{1}{\sqrt{n}} \sum x_j |i, k, t + o_{ik}\rangle$.
- Key value map to obtain $\frac{1}{\sqrt{n}} \sum x_i |i, i, j\rangle = |i, x\rangle$.

# Jordan's lemma

- $P, Q$ are projectors onto $\mathcal{P}, \mathcal{Q}$ and $PQP = \sum_{\lambda_i > 0} \lambda_i v_i v_i^t$.

# Jordan's lemma

- $P, Q$ are projectors onto $\mathcal{P}, \mathcal{Q}$ and $PQP = \sum_{\lambda_i > 0} \lambda_i v_i v_i^t$.
- $w_i := Qv_i / |Qv_i|_2$ is an eigenvector for $QPQ$ with eigenvalue $\lambda_i$ and $Span(v_i, w_i)$ is invariant subspaces under the action of $P, Q$,

# Jordan's lemma

- $P, Q$ are projectors onto $\mathcal{P}, \mathcal{Q}$ and $PQP = \sum_{\lambda_i > 0} \lambda_i v_i v_i^t$.
- $w_i := Qv_i / |Qv_i|_2$ is an eigenvector for $QPQ$ with eigenvalue $\lambda_i$ and $Span(v_i, w_i)$ is invariant subspaces under the action of $P, Q$,

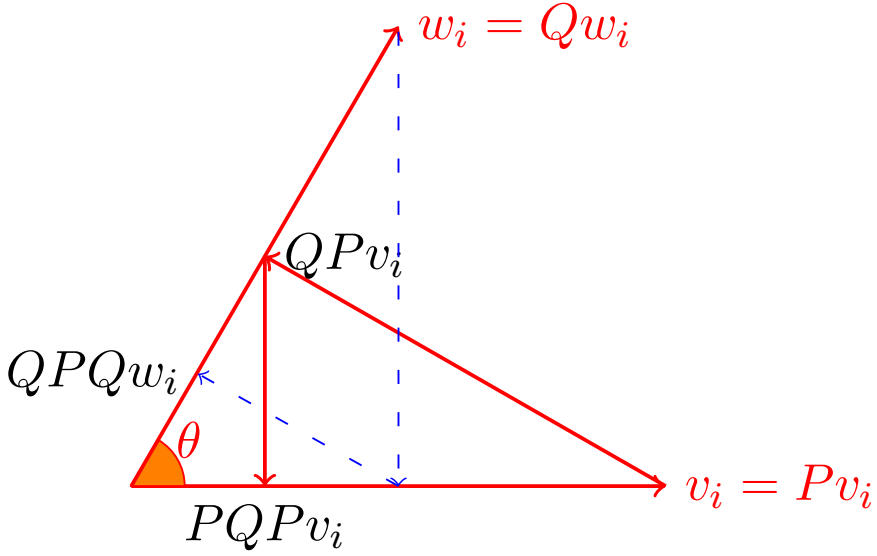


- $\sigma_i^2 = \lambda_i = \cos^2(\theta)$

# Jordan's lemma

- $P, Q$ are projectors onto $\mathcal{P}, \mathcal{Q}$ and $PQP = \sum_{\lambda_i > 0} \lambda_i v_i v_i^t$.
- $w_i := Qv_i / |Qv_i|_2$ is an eigenvector for $QPQ$ with eigenvalue $\lambda_i$ and $Span(v_i, w_i)$ is invariant subspaces under the action of $P, Q$,

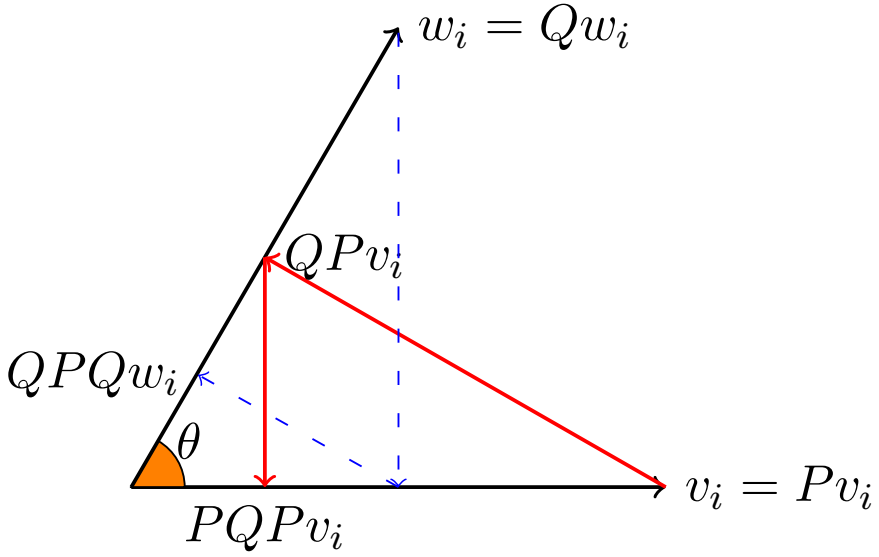


- $\sigma_i^2 = \lambda_i = \cos^2(\theta)$
- Estimating singular values of $PQ$ reduces to estimating the principal angles $\theta_i$.

# Singular values and principal angles

- If $\|M\|_F = 1$ then $M = A^t B$ with $A \in \mathbb{R}^{mn \times m}, B \in \mathbb{R}^{mn \times n}$ such that $A^t A = I_m$ and $B^t B = I_n$.

# Singular values and principal angles

- If $\|M\|_F = 1$ then $M = A^t B$ with $A \in \mathbb{R}^{mn \times m}, B \in \mathbb{R}^{mn \times n}$ such that $A^t A = I_m$ and $B^t B = I_n$.
- Proof: Select $a^i = |i, m_i\rangle$ and $b^j = |p, j\rangle$ where $|p\rangle = \sum_{i \in [m]} m_i |i\rangle$.

# Singular values and principal angles

- If $\|M\|_F = 1$ then $M = A^t B$ with $A \in \mathbb{R}^{mn \times m}, B \in \mathbb{R}^{mn \times n}$ such that $A^t A = I_m$ and $B^t B = I_n$.
- Proof: Select $a^i = |i, m_i\rangle$ and $b^j = |p, j\rangle$ where $|p\rangle = \sum_{i \in [m]} m_i |i\rangle$.
- Orthogonality follows from definition and $\langle a^i | b^j \rangle = m_{ij}$.

# Singular values and principal angles

- If $\|M\|_F = 1$ then $M = A^t B$ with $A \in \mathbb{R}^{mn \times m}, B \in \mathbb{R}^{mn \times n}$ such that $A^t A = I_m$ and $B^t B = I_n$.
- Proof: Select $a^i = |i, m_i\rangle$ and $b^j = |p, j\rangle$ where $|p\rangle = \sum_{i \in [m]} m_i |i\rangle$.
- Orthogonality follows from definition and $\langle a^i | b^j \rangle = m_{ij}$.
- Define projector $P = AA^t$ and $Q = BB^t$, then $PQ = AMB^t$ is iso-spectral with $M^t M$.

# Singular values and principal angles

- If $\|M\|_F = 1$ then $M = A^t B$ with $A \in \mathbb{R}^{mn \times m}, B \in \mathbb{R}^{mn \times n}$ such that $A^t A = I_m$ and $B^t B = I_n$.
- Proof: Select $a^i = |i, m_i\rangle$ and $b^j = |p, j\rangle$ where $|p\rangle = \sum_{i \in [m]} m_i |i\rangle$.
- Orthogonality follows from definition and $\langle a^i | b^j \rangle = m_{ij}$.
- Define projector $P = AA^t$ and $Q = BB^t$, then $PQ = AMB^t$ is iso-spectral with $M^t M$.
- It suffices to estimate the singular values of $PQ$, which are the principal angles between $\mathcal{P}$ and $\mathcal{Q}$.

# Reflections

- What is the reflection in $\mathcal{P} = Col(A)$?

# Reflections

- What is the reflection in $\mathcal{P} = Col(A)$?
- Let $U$ be the multiplication by $A$ unitary, $U\left|x, 0^{\log n}\right\rangle = \left|Ax\right\rangle = \sum_i x_i \left|i, m_i\right\rangle$.

# Reflections

- What is the reflection in $\mathcal{P} = Col(A)$?
- Let $U$ be the multiplication by $A$ unitary, $U\left|x, 0^{\log n}\right\rangle = \left|Ax\right\rangle = \sum_i x_i \left|i, m_i\right\rangle$.
- $R_A = UR_0U^{-1}$ can be implemented as unitary using augmented $QRAM$.

# Reflections

- What is the reflection in $\mathcal{P} = Col(A)$?
- Let $U$ be the multiplication by $A$ unitary, $U\left|x, 0^{\log n}\right\rangle = \left|Ax\right\rangle = \sum_i x_i \left|i, m_i\right\rangle$.
- $R_A = UR_0U^{-1}$ can be implemented as unitary using augmented $QRAM$.
- Multiplication by $B$ is simpler, $V\left|0^{\log m}, x\right\rangle = \left|p, x\right\rangle$.

# Reflections

- What is the reflection in $\mathcal{P} = Col(A)$?
- Let $U$ be the multiplication by $A$ unitary, $U\left|x, 0^{\log n}\right\rangle = \left|Ax\right\rangle = \sum_i x_i \left|i, m_i\right\rangle$.
- $R_A = UR_0U^{-1}$ can be implemented as unitary using augmented $QRAM$.
- Multiplication by $B$ is simpler, $V\left|0^{\log m}, x\right\rangle = \left|p, x\right\rangle$.
- $R_B = VR_0V^{-1}$ can be implemented as unitary using augmented $QRAM$.

# Reflections

- What is the reflection in $\mathcal{P} = Col(A)$?
- Let $U$ be the multiplication by $A$ unitary, $U\left|x, 0^{\log n}\right\rangle = \left|Ax\right\rangle = \sum_i x_i \left|i, m_i\right\rangle$.
- $R_A = UR_0U^{-1}$ can be implemented as unitary using augmented $QRAM$.
- Multiplication by $B$ is simpler, $V\left|0^{\log m}, x\right\rangle = \left|p, x\right\rangle$.
- $R_B = VR_0V^{-1}$ can be implemented as unitary using augmented $QRAM$.
- $R_AR_B$ has eigenvalues $e^{i2\theta_i}$, use phase estimation.

# Quantum singular value estimation

# Quantum singular value estimation

- **Theorem**

  *If $M \in \mathbb{R}^{m \times n}$ has $SVD$ given by $M = \sum_i \sigma_i u_i v_i^t$ and is stored in the augmented $QRAM$, there is a quantum algorithm that transforms $\sum_i \alpha_i |v_i\rangle \to \sum_i \alpha_i |v_i\rangle |\overline{\sigma_i}\rangle$ such that $\overline{\sigma_i} \in \sigma_i \pm \epsilon \|M\|_F$ for all $i$ with probability at least $1 - 1/poly(n)$ in time $O(polylog(mn)/\epsilon)$.*

# Quantum singular value estimation

- **Theorem**

  *If $M \in \mathbb{R}^{m \times n}$ has $SVD$ given by $M = \sum_i \sigma_i u_i v_i^t$ and is stored in the augmented $QRAM$, there is a quantum algorithm that transforms $\sum_i \alpha_i |v_i\rangle \to \sum_i \alpha_i |v_i\rangle |\overline{\sigma_i}\rangle$ such that $\overline{\sigma_i} \in \sigma_i \pm \epsilon \|M\|_F$ for all $i$ with probability at least $1 - 1/poly(n)$ in time $O(polylog(mn)/\epsilon)$.*

  - Can be used for quantum projections.

# Applications

- Low rank approximation by column sampling.

# Applications

- Low rank approximation by column sampling.
- A comparison of quantum and classical $CX$ decomposition for power law decay.

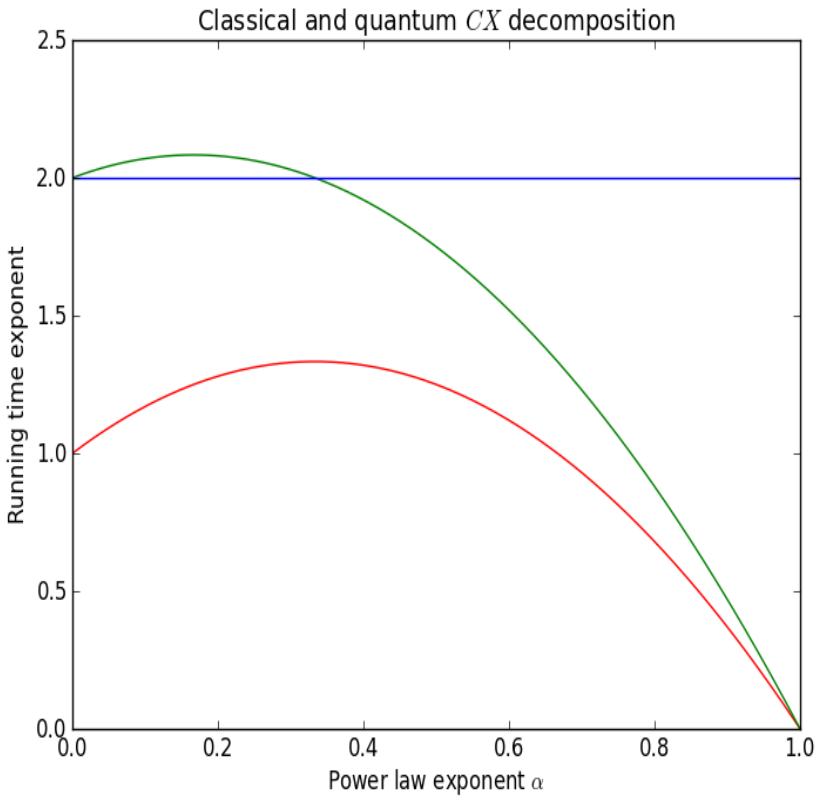

# Questions

- Quantum recommender systems.

# Questions

- Quantum recommender systems.
- Can quantum computing help with big data?

# Questions

- Quantum recommender systems.
- Can quantum computing help with big data?
- Quadratic speedups for Markov chain methods?

# Questions

- Quantum recommender systems.
- Can quantum computing help with big data?
- Quadratic speedups for Markov chain methods?
- Iterative quantum algorithms? Gradient descent? Optimization?

# Questions

- Quantum recommender systems.
- Can quantum computing help with big data?
- Quadratic speedups for Markov chain methods?
- Iterative quantum algorithms? Gradient descent? Optimization?
- Learning and inference on quantum max entropy/graphical models? Quantum exponential family?

# The Last Slide

Thank You.