Partial QFA implementation on a physical quantum device

Author: Mārtiņš Kālis
Master's thesis supervisor:
Prof. Andris Ambainis, Dr. sc. comp.

University of Latvia

12.10.2018.

Plan of the talk

Essentials on physical quantum computing devices.

Quantum Finite Automaton.

Results.

Essentials on physical quantum computing devices

The quality of qubits (T_1, T_2).

The quality of the implementation of logic gates.

Physical connections between qubits.

Defining unitary transformations.

The effect of compilators on observable quantum effects.

Interactions with classical bits.

The quality of qubits (T_1, T_2).

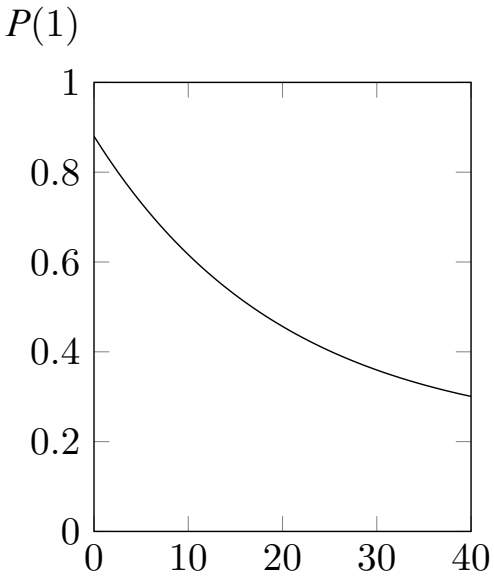

(a) $T_1 = 20\,\mu s$

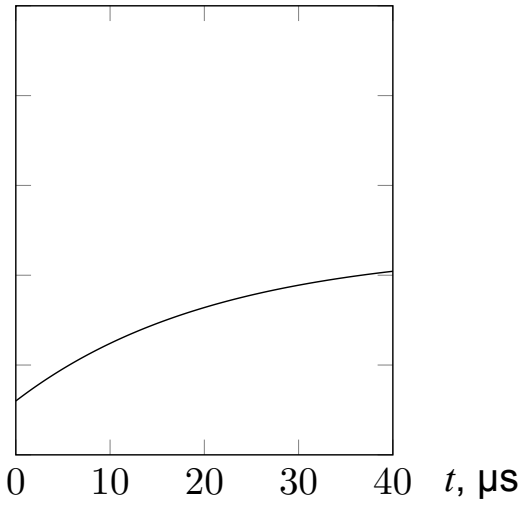

(b) $T_2 = 21{,}13\,\mu s$

Figure: T_1, T_2 experimental results — probability to measure "1" after time t. Values from *IBM QE* tutorial.

The quality of the implementation of logic gates.

Initial state	Relative frequency of outcome 00	01	10	11
00	**0.714**	0.147	0.073	0.065
01	0.318	**0.564**	0.051	0.066
10	0.129	0.070	**0.737**	0.063
11	0.091	0.109	0.142	**0.658**

Table: $(\mathrm{CNOT}(Q_1 \to Q_0))^{16}$ results. Date: 22.01.2018. Bold are the relative frequencies of theoretically (no-noise) expected results. Technical parameters of qubits used in the experiment: $T_1(Q_0) = 50.5$μs, $T_2(Q_0) = 25.7$μs, $T_1(Q_1) = 45.0$μs, $T_2(Q_1) = 39.6$μs, $\mathrm{CNOT}(Q_1 \to Q_0)$ error 0.0233, Measurement error Q_0 — 0.054, Q_1 — 0.04. $n = 1024$.

Physical connections between qubits (*IBM QE*).

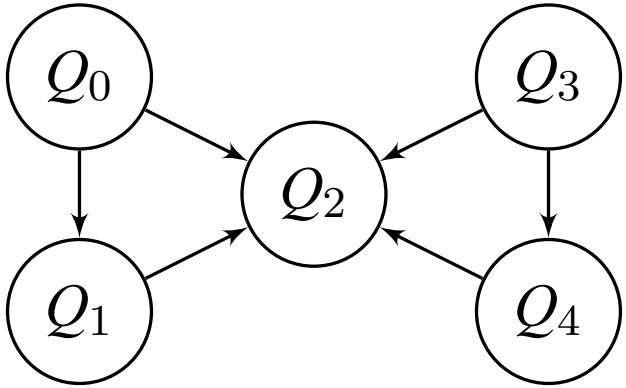

(a) *ibmqx2*

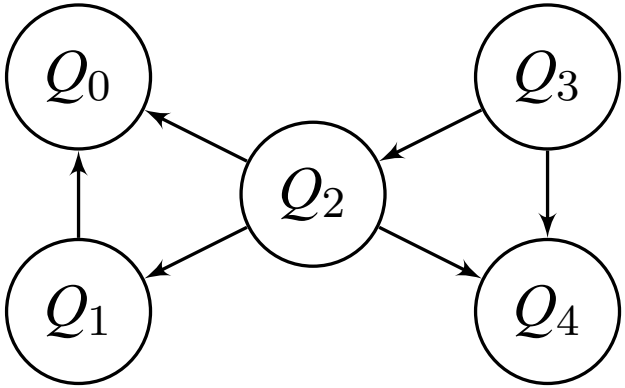

(b) *ibmqx4*

Figure: Physically implemented CNOT gates on *IBM Quantum Experience*. In figure *ibmqx2* the arrow from Q_0 to Q_1 shows that it is possible to do a CNOT operation in this direction without the use of additional gates.

Physical connections between qubits (*Rigetti*).

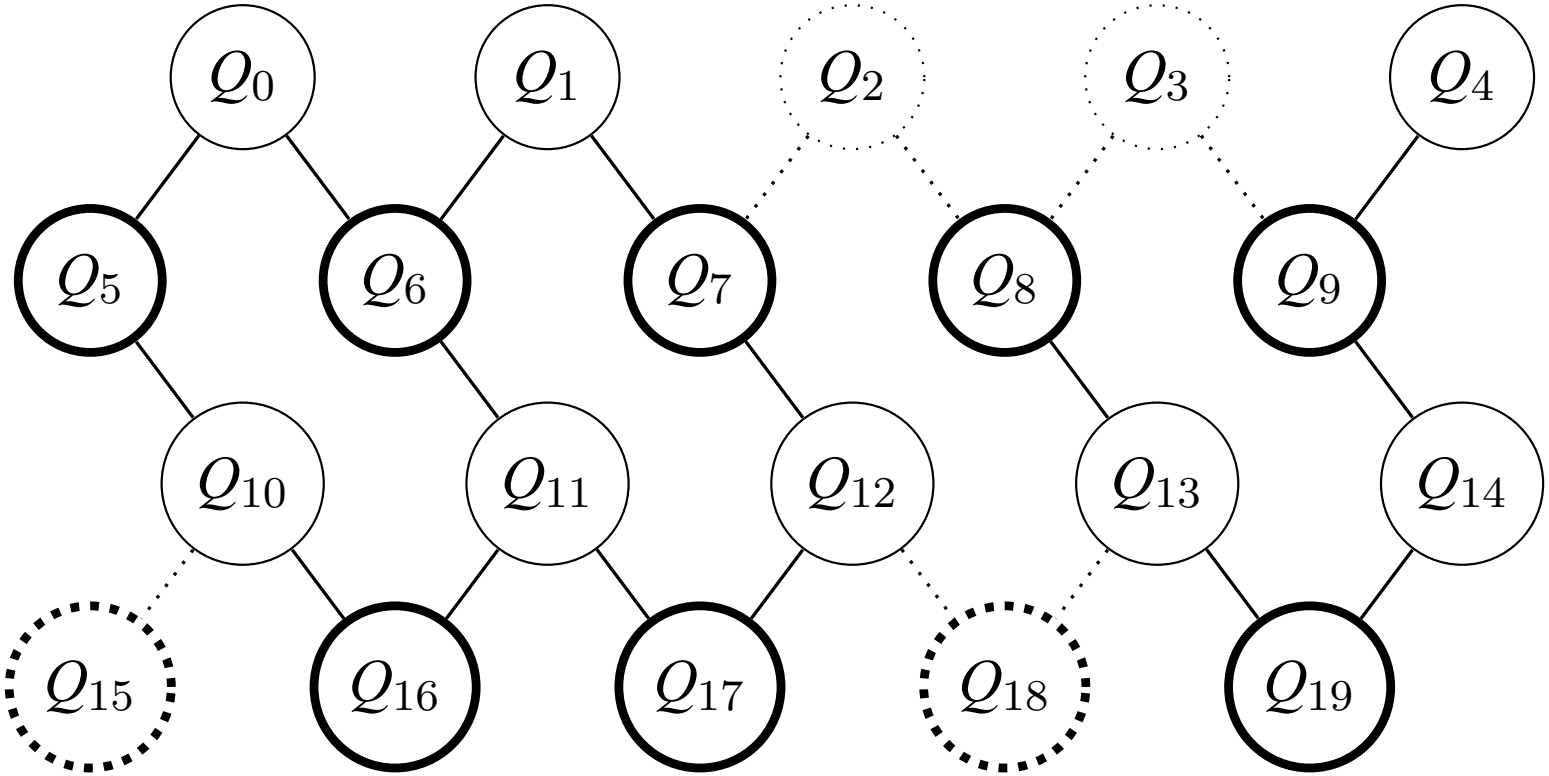

Figure: *Rigetti Q19–Acorn*. Thin-lined-circles represent fixed-frequency qubits, thick-lined-circles represent variable frequency qubits.

Other notes

Defining unitary transformations.

- through other logic gates (*IBM QE*),
- through matrix form (*Rigetti*).

The effect of compilators on observable quantum effects.

Interactions with classical bits.

Quantum finite automaton

[1] Andris Ambainis and Nikolajs Nahimovs. Improved constructions of quantum automata. *Theoretical Computer Science*, 410(20):1916–1922, 2009.

"Let p be a prime. We consider the language $L_p = \{a^i \mid i \text{ is divisible by } p\}$. It is easy to see that any deterministic 1-way finite automaton recognizing L_p has at least p states. However, there is a much more efficient QFA!"

Quantum finite automaton

[1] Andris Ambainis and Nikolajs Nahimovs. Improved constructions of quantum automata. *Theoretical Computer Science*, 410(20):1916–1922, 2009.

$$\mathcal{M} = (Q, \Sigma, \delta, q_0, Q_{\text{acc}}, Q_{\text{rej}}),$$

Q	—	finite set of states
Σ	—	input alphabet
δ	—	state transition function
q_0	—	starting state
Q_{acc}	—	set of accepting states
Q_{rej}	—	set of rejecting states.

The *working alphabet* of the automaton $\mathcal{M}$ is $\Gamma = \Sigma \cup \{ ¢, \$ \}$.

One-qubit quantum finite automaton

$$
\begin{aligned}
Q &= \{|0\rangle, |1\rangle\} \\
q_0 &= |0\rangle \\
Q_{\text{acc}} &= \{|0\rangle\} \\
Q_{\text{rej}} &= \{|1\rangle\} \\
\Sigma &= \{a\}
\end{aligned}
$$

Upon reading the symbol a, the automaton performs transformation $V_a = \mathrm{R}(\phi)$, where $\phi = 2\pi/p$:

$$\begin{aligned} |0\rangle &\longrightarrow \quad \cos\phi\,|0\rangle + \sin\phi\,|1\rangle \\ |1\rangle &\longrightarrow -\sin\phi\,|0\rangle + \cos\phi\,|1\rangle \end{aligned}$$

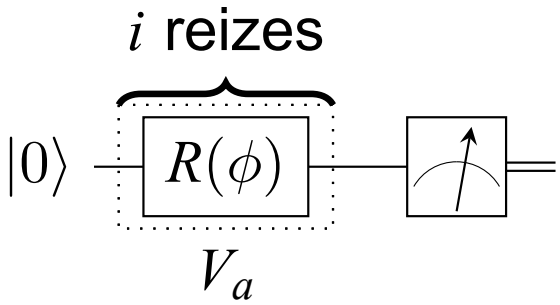

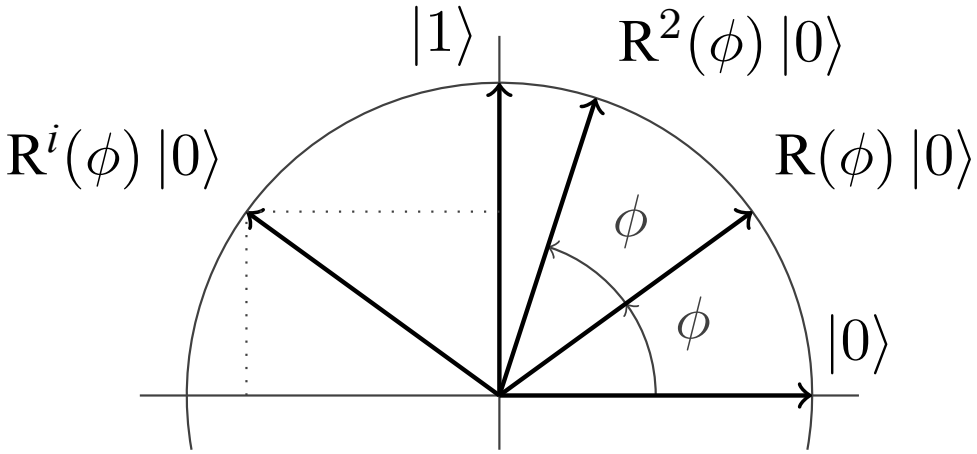

M_{k_i}, where $k_i \in \{1, \ldots, p-1\}$, $i \in \{1, \ldots, 2^{n-1}\}$ denotes a QFA, where:

$$
\begin{aligned}
Q &= \{|i,0\rangle, |i,1\rangle\} \\
q_0 &= |i,0\rangle \\
Q_{\text{acc}} &= \{|i,0\rangle\} \\
Q_{\text{rej}} &= \{|i,1\rangle\} \\
\Sigma &= \{a\}
\end{aligned}
$$

Upon reading the symbol a, the automaton M_{k_i} performs transformation $V_a = \mathrm{R}(\phi)$, kur $\phi = 2\pi k_i/p$:

$$\begin{aligned} |i,0\rangle &\longrightarrow \quad \cos\phi\,|i,0\rangle + \sin\phi\,|i,1\rangle \\ |i,1\rangle &\longrightarrow -\sin\phi\,|i,0\rangle + \cos\phi\,|i,1\rangle \end{aligned}$$

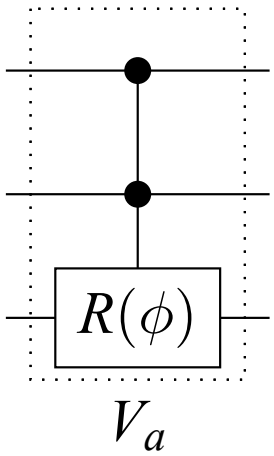

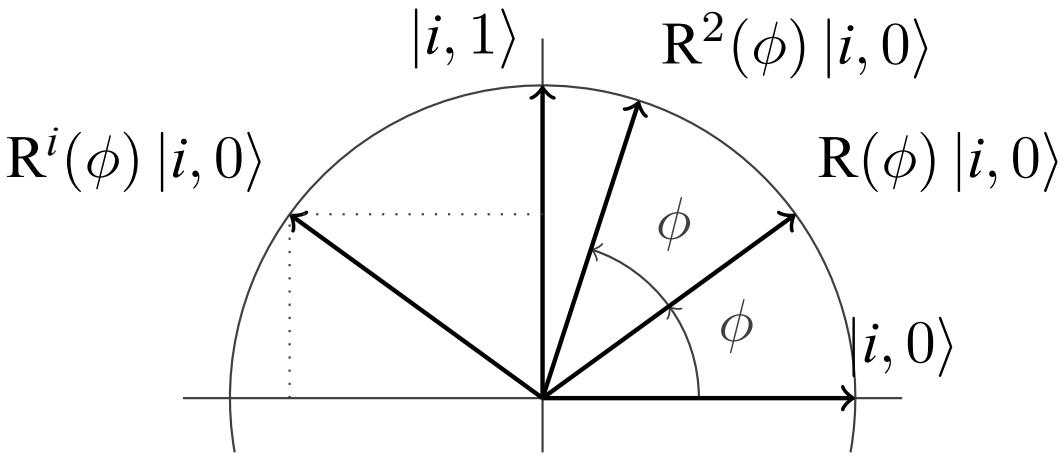

An example of $M_{k_{11}}$ transformation V_a.

n-qubit QFA

$$
\begin{aligned}
Q &= \{|s\rangle \mid s \in \{0,1\}^n\} \\
q_0 &= |0\ldots0\rangle \\
Q_{\text{acc}} &= \{|0\ldots0\rangle\} \\
Q_{\text{rej}} &= Q \setminus Q_{\text{acc}} \\
\Sigma &= \{a\}
\end{aligned}
$$

In the case of three qubits, the automaton M is a combination of automata $\{ M_{k_i} \}_{i=1}^{4}$. In theory, the transformation V_a is easy to describe — it is the following block diagonal 8×8 matrix, where V_{k_i} denotes the transformation done by automaton M_{k_i} upon reading the symbol a, with zeros elsewhere:

$$V_a = \begin{pmatrix} V_{k_1} & & & \\ & V_{k_2} & & \\ & & V_{k_3} & \\ & & & V_{k_4} \end{pmatrix}$$

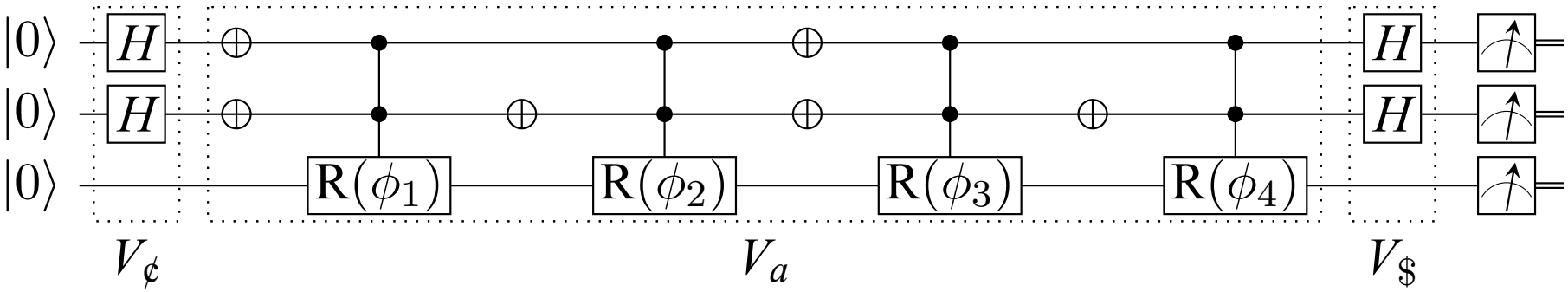

Three-qubit *QFA* quantum circuit with $i = 1$. Naïve implementation.

[1] result — probability to get an accepting state upon measurement after reading a^j is:

$$\left(\frac{1}{2^n} \sum_{i=1}^{2^n} \cos \frac{2\pi k_i j}{p} \right)^2$$

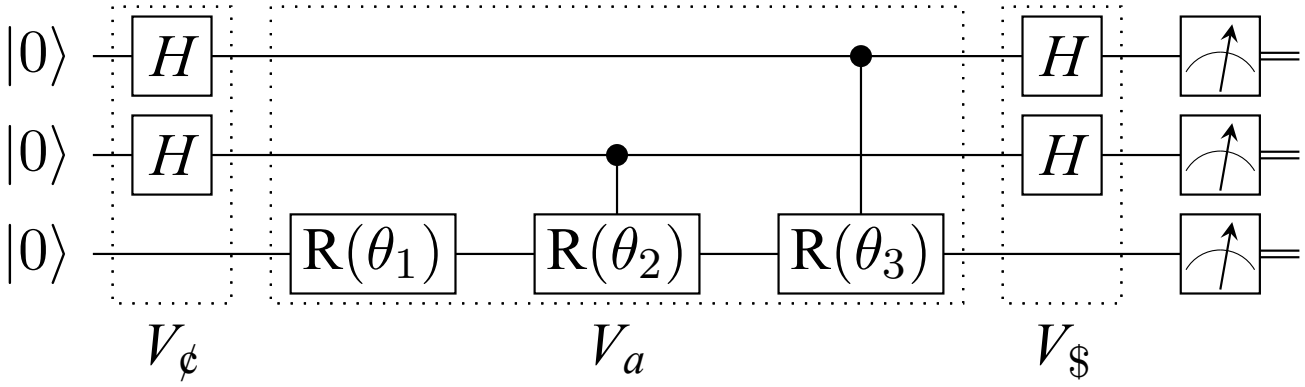

Three qubit *QFA* circuit with $i = 1$. Optimized version.
The effect of V_a:

$$
\begin{aligned}
|000\rangle &\longrightarrow |00\rangle \otimes \mathrm{R}(\theta_1)\,|0\rangle \\
|010\rangle &\longrightarrow |01\rangle \otimes \mathrm{R}(\theta_1)\,\mathrm{R}(\theta_2)\,|0\rangle \\
|100\rangle &\longrightarrow |10\rangle \otimes \mathrm{R}(\theta_1)\,\mathrm{R}(\theta_3)\,|0\rangle \\
|110\rangle &\longrightarrow |11\rangle \otimes \mathrm{R}(\theta_1)\,\mathrm{R}(\theta_2)\,\mathrm{R}(\theta_3)\,|0\rangle
\end{aligned}
$$

Measurement results of a one-qubit automaton — *IBM QE*

i	0	1	r	p_t
11	0,891	0,109	0,891	1,000
14	0,183	0,817	0,817	0,980
107	0,520	0,480	0,480	0,980
107^*	0,276	0,724	0,724	0,980
110	0,550	0,450	0,550	1,000
110^*	0,773	0,227	0,773	1,000

The results of the one-qubit QFA implementation on *ibmqx4* for word a^i. Number of trials: 1000 for each value of i. Date: 09.05.2018. Technical parameters of Q_1 used in the implementation: $T_1 = 43,8\mu s$, $T_2 = 14,4\mu s$, one-qubit gate error: $0,086\%$, measurement error: $5,4\%$. Experiments 107^* un 110^* were performed on Q_2: $T_1 = 48,9\mu s$, $T_2 = 53,8\mu s$, one-qubit gate error: $0,094\%$, measurement error: $7,9\%$. p_t — the theoretic (no-noise) probability of the correct answer. r — the relative frequency of the correct answer.

Measurement results of a three-qubit automaton — *IBM QE*

N/O	i	r	p_t
N	1	0,809	0,987
O	1	0,969	0,987
N	2	0,840	0,888
O	2	0,773	0,888
O	4	0,840	0,948
O	11	0,187	1,000

Three-qubit automaton, *ibmqx5*. The sequence for the optimized algorithm:: Q_{11}, Q_{10}, Q_9. For the naïve algorithm: Q_{11}, Q_8, Q_7. r — the relative frequency of the correct answer. p_t — the theoretic (no-noise) probability of the correct answer.

Measurement results of a one-qubit automaton — *Rigetti*

i	0	1	r	p_t
1	0,673	0,327	0,327	0,292
11	0,833	0,167	0,833	1,000
14	0,225	0,775	0,775	0,980
107	0,479	0,521	0,521	0,980
110	0,532	0,468	0,532	1,000

The results of one-qubit QFA *Rigetti* implementation. p_t — the theoretic (no-noise) probability of the correct answer. r — the relative frequency of the correct answer.

Results and conclusions

The performance of currently available quantum computing devices is limited by the short *life span* of their qubits, and the high error rates of gates.

The implementation results on physical quantum computing devices can be substantially improved by taking into account the quality of qubit connections and noise profiles.

If you develop a *shallow* quantum algorithm that can be implemented with few qubits, I am happy to help implement it on the available physical devices.

Thank you!

Questions?
martins@kalis.lv